Lundy Terminal

The Bartlett School of Architecture
MEng Engineering & Architectural Design
BARC0161 Design Practice 2
Isaac Wang

Abstract

Lundy Island sits west of Devon at the southwest end of England, a strategic location for the vessel routes of the Bristol Channel. Despite its remoteness, it is owned by National Trust and operated as a holiday destination and a place for scientific research. Lundy Island is roughly 5 kilometres long and 1 kilometre wide, with a considerable height difference of 143 metres ascending right from the shore.

Lundy is located in West England at a strategic position at Bristol Channel. However, it is currently connected with the mainland via helicopters operating on weekdays throughout the whole year and ferry liners operating only in summer. Moreover, associated the ships and ferries, especially the larger ones such as the cruise liners, brought the amount of carbon emission and pollution to the ports and the cities and towns where the docks and piers locate concern me, as after a research on the distribution of the cruise ports.

Therefore, An off-shore transport hub terminal to provide a new transport hub for Bristol Channel and a transfer point for ships and ocean liners, including cruise liners between vessels of various sizes is thought to be introduced to Lundy. The terminal uses the nuclear battery to power up the entire terminal and the ships and ocean liners docking or passing through. This reduces carbon emissions and pollution to inland cities as the vessel could be charged off-shore in Lundy with a nuclear battery. Meanwhile, a new network of connections between the neighbouring ports could be built to form more relationships and vessel routes in Bristol Channel.

While building a new centre of connections via waterways for the surrounding towns and ports provides a unique leisure place and new flat solid airfields for transportation via helicopters for Lundy Island. As the nuclear battery is used to power up the terminal and the ships, ocean liners, and cruise liners travelling through the terminal to reduce carbon emissions and pollution released to the neighbouring ports and cities.

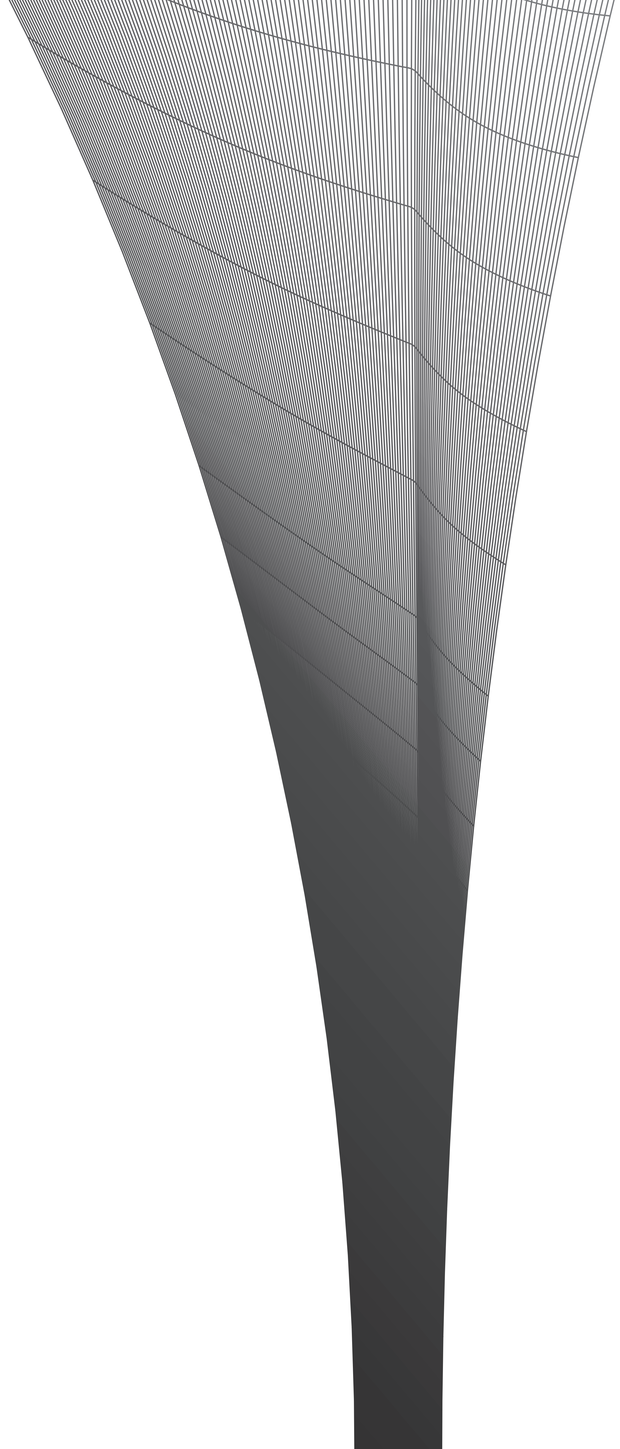

Current Port Distribution at Bristol Channel

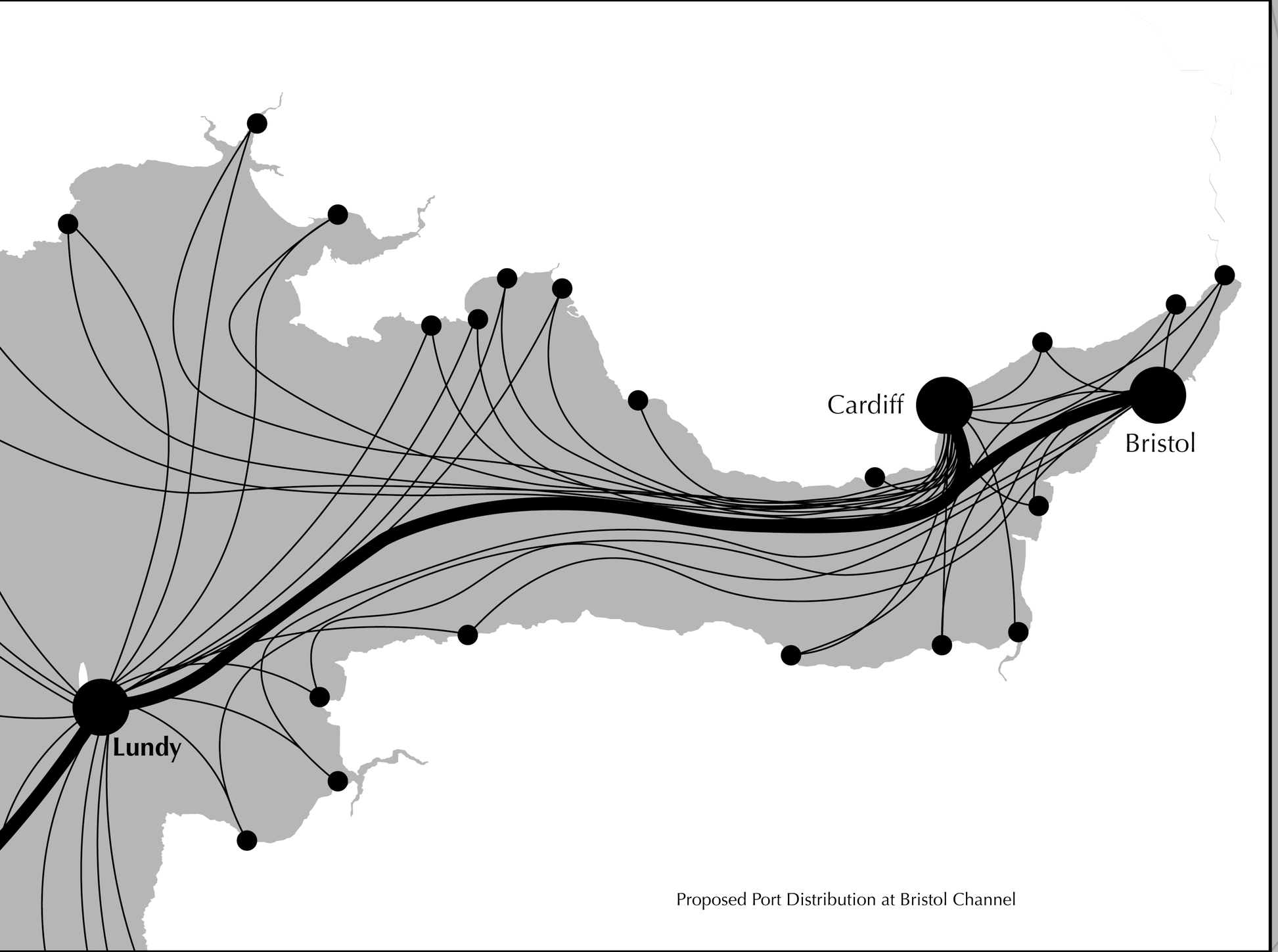

Proposed Port Distribution at Bristol Channel

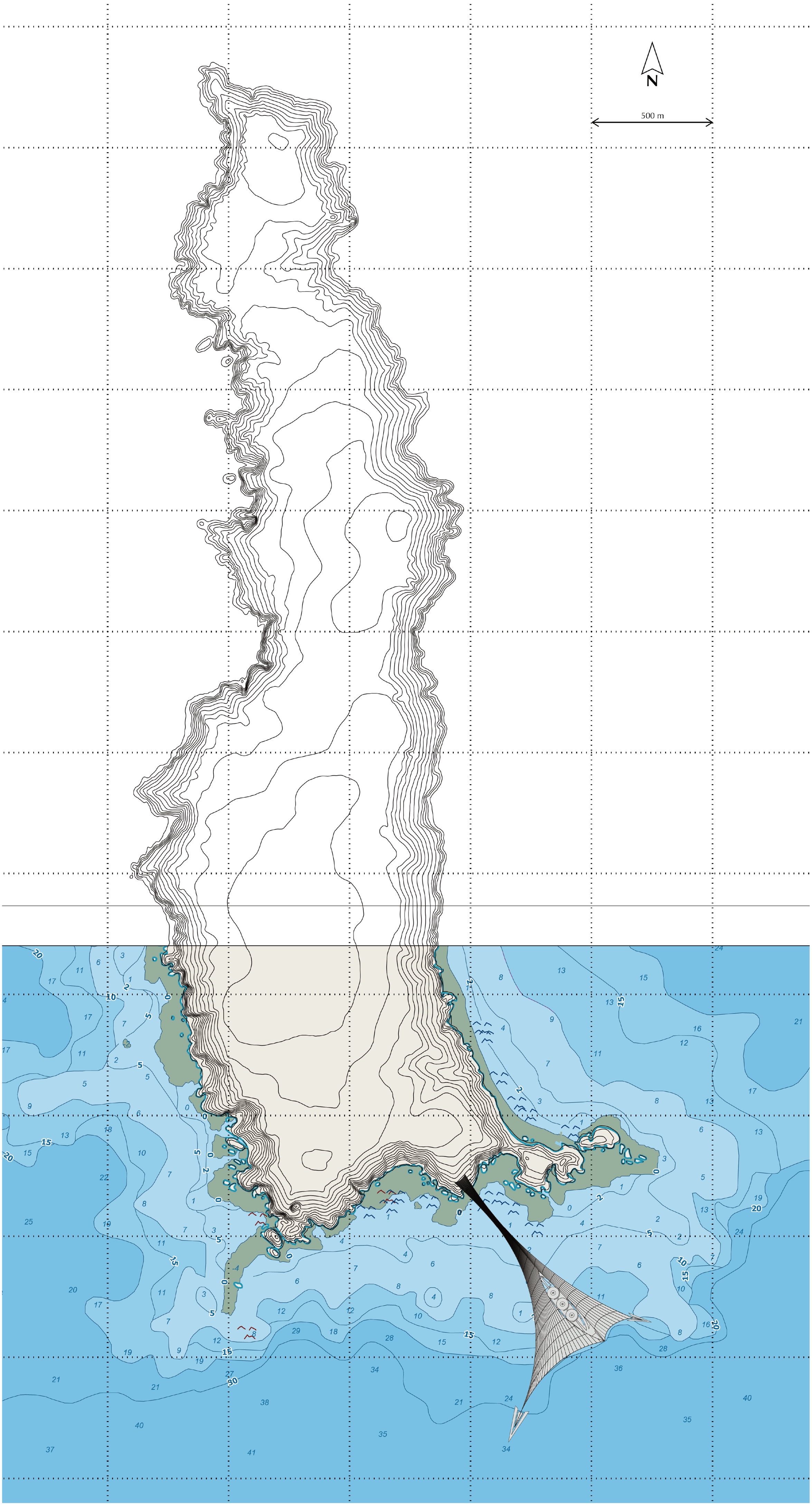

Site Plan

The terminal is covered by a steel-framed tensile structure divided into two levels, an upper level acting as the cruise port containing the leisure areas and functional areas like a circulation hall, ticket office, and a lower level acting as the pier/dock for ferries, ocean liners and smaller ships and vessels to dock and operate. Above the upper level, there are three separate heliports, each allocated at the top of a central column, which contains lifts and sets of stairs within which to provide access and interconnection between the levels and the heliports.

The upper level is 40 meters above the sea level (low tide) to allow access for the majority of different sized vessels to the lower level and to shelter the lower level from solar exposure and rain, and the top of the lower level is 10 meters above the sea level (low tide). The upper level is firmly supported by the lower level, a four-storey, solid-concrete building supported by pile foundations.

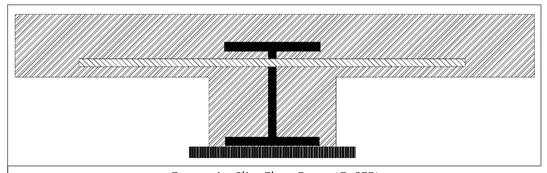

Composite Slim Floor Beam (CoSFB)

All slabs use composite slim floor solution, which embeds steel beams into the planks by connecting in-situ concrete with the beams like a dowel, to trim down the thickness of the slab to minimise the weight of the structure and the cost while saving valuable vertical spaces for the lower level, as the height of each storey of the lower level is directly proportional to the distance between the main structure of the lower level and the floating dock which shall be kept as small as possible while maintaining the ratio of rise no larger than 1:5. The thicknesses of the top slab of the lower level and the floor slab of the top level are 0.4m and 2.0m respectively.

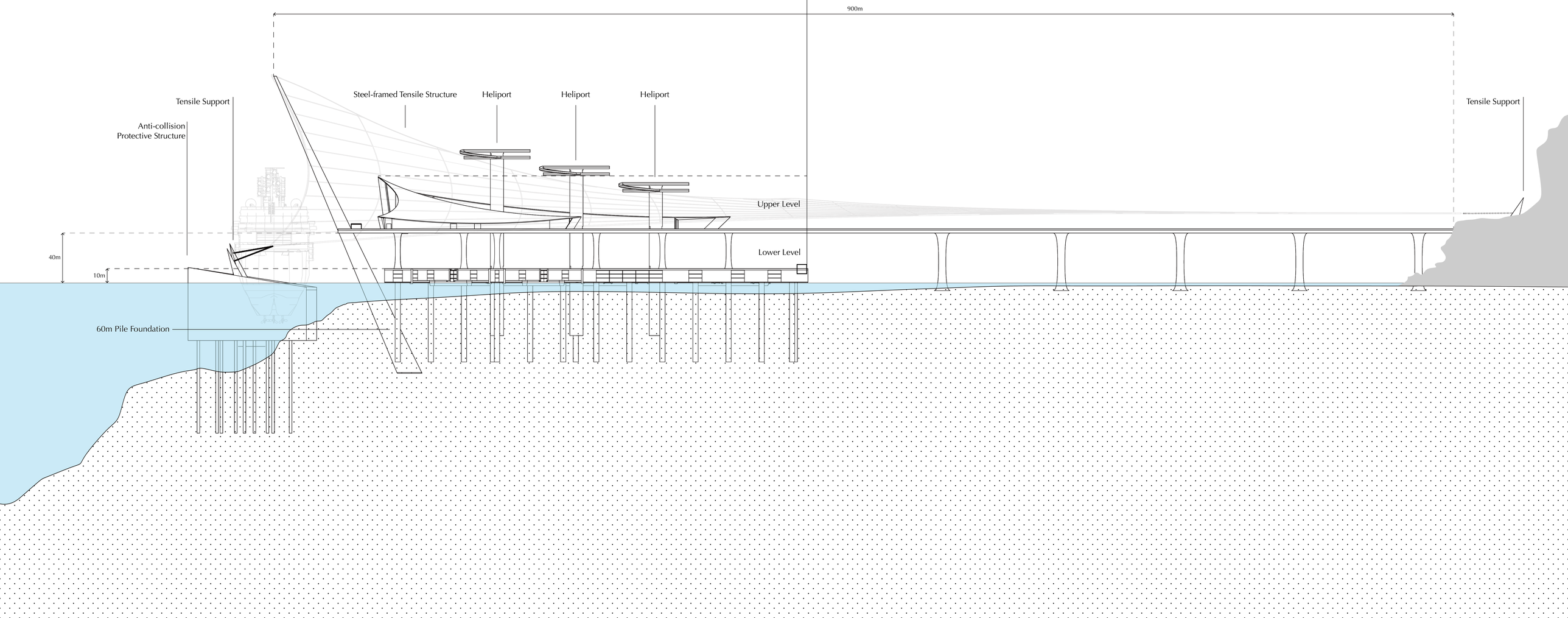

Plan

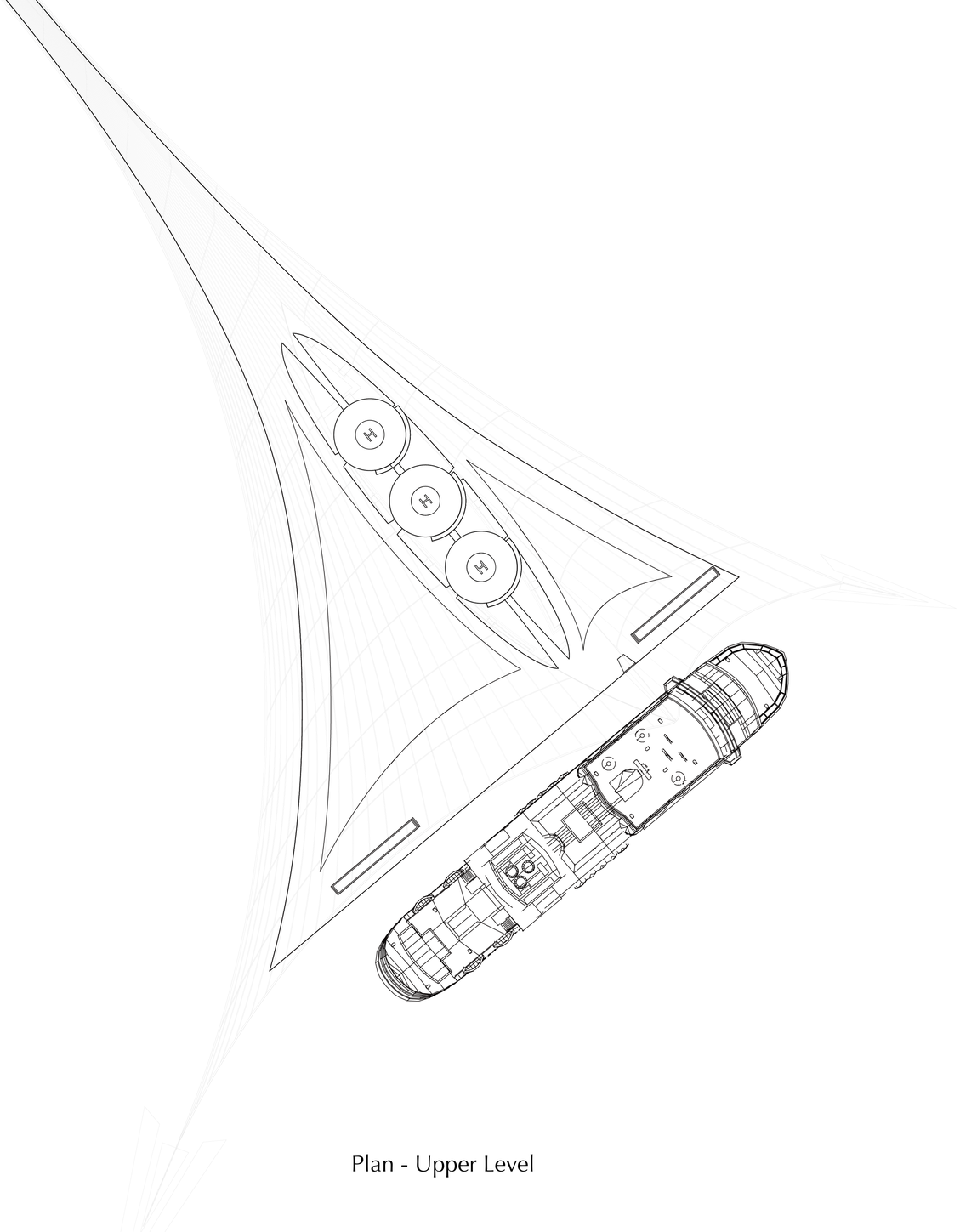

Plan - Upper Level

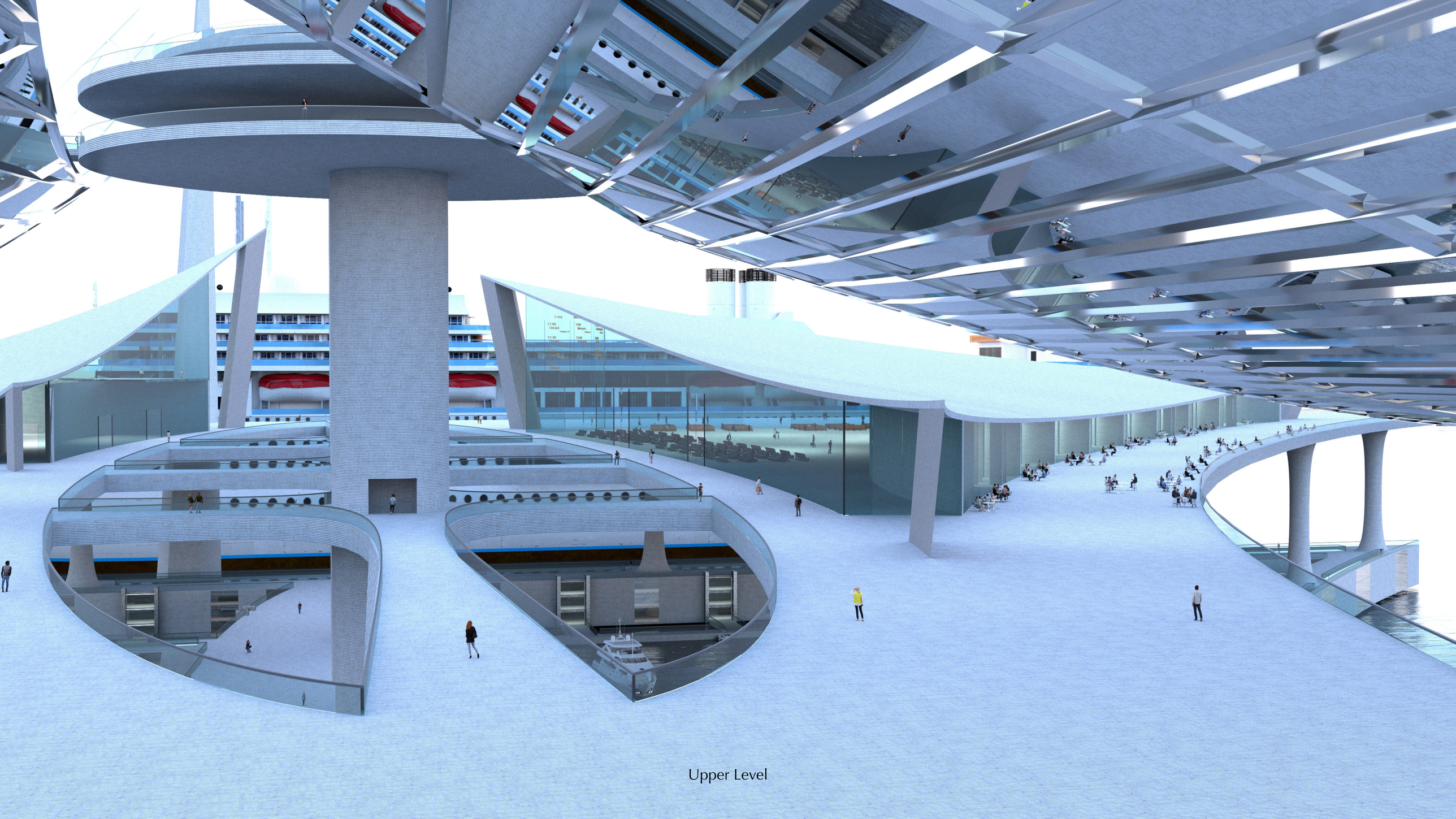

Upper Level

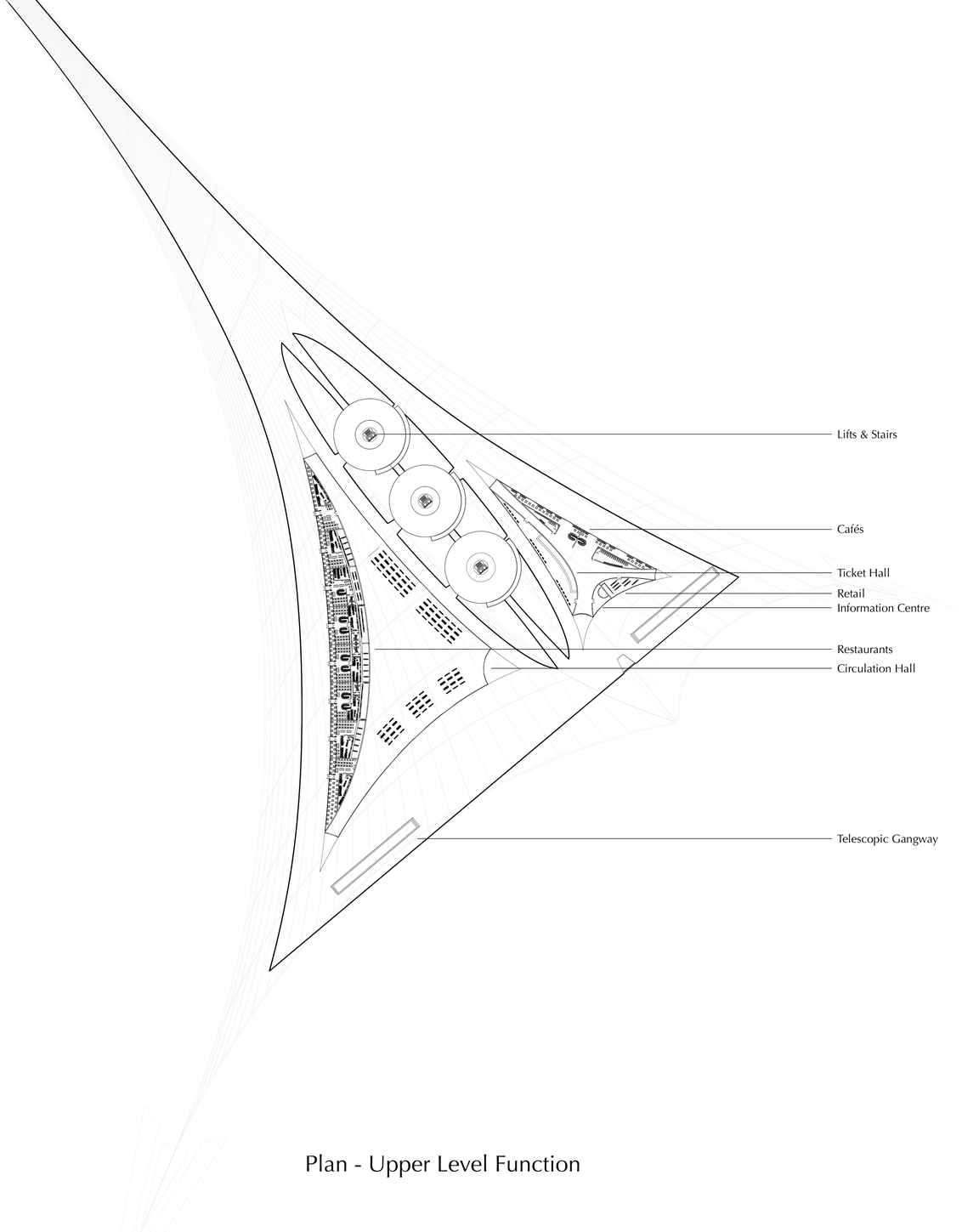

Plan - Upper Level Function

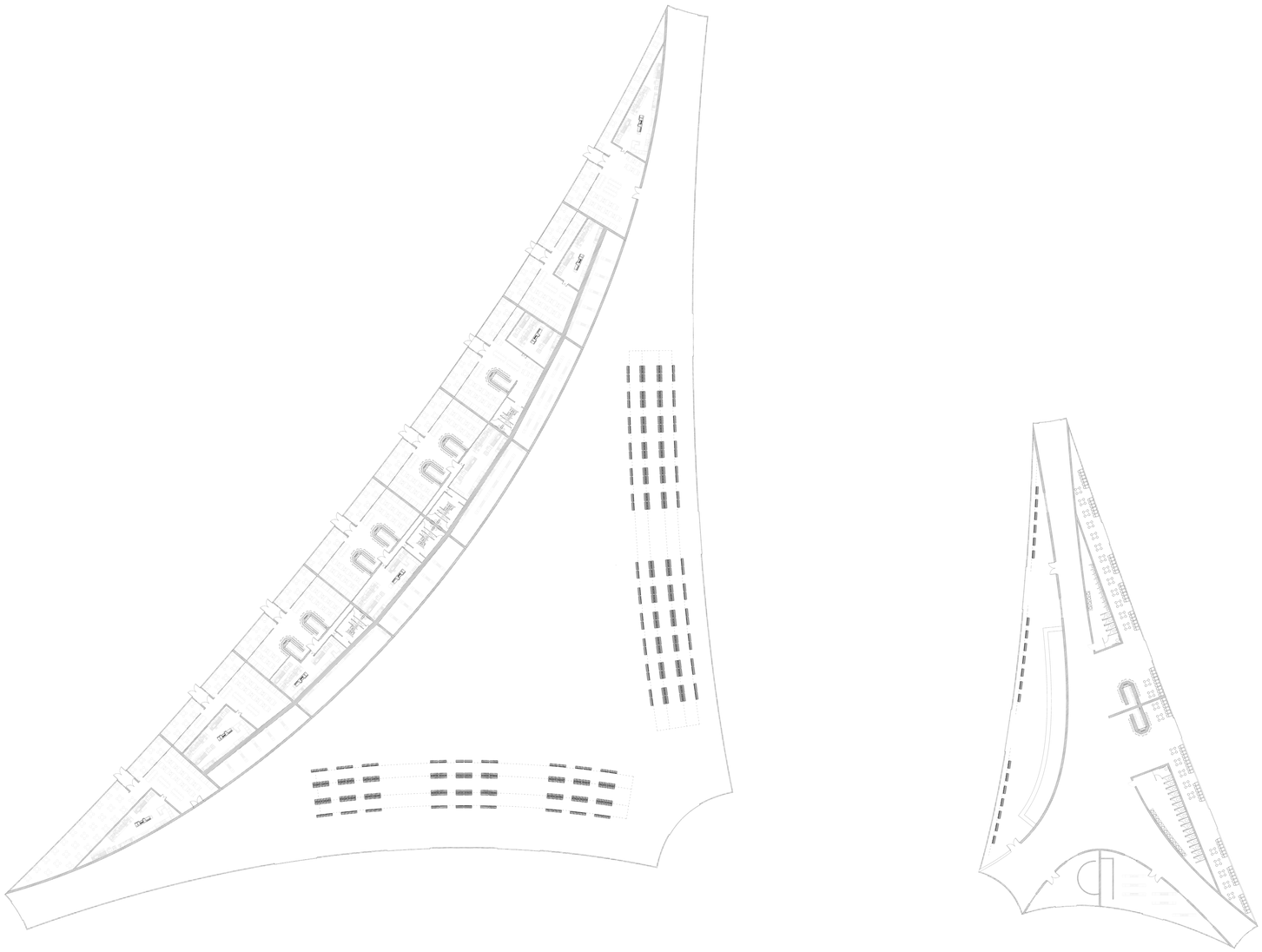

Upper Level - Detailed Building Plan

Upper Level - Circulation Hall

Upper Level

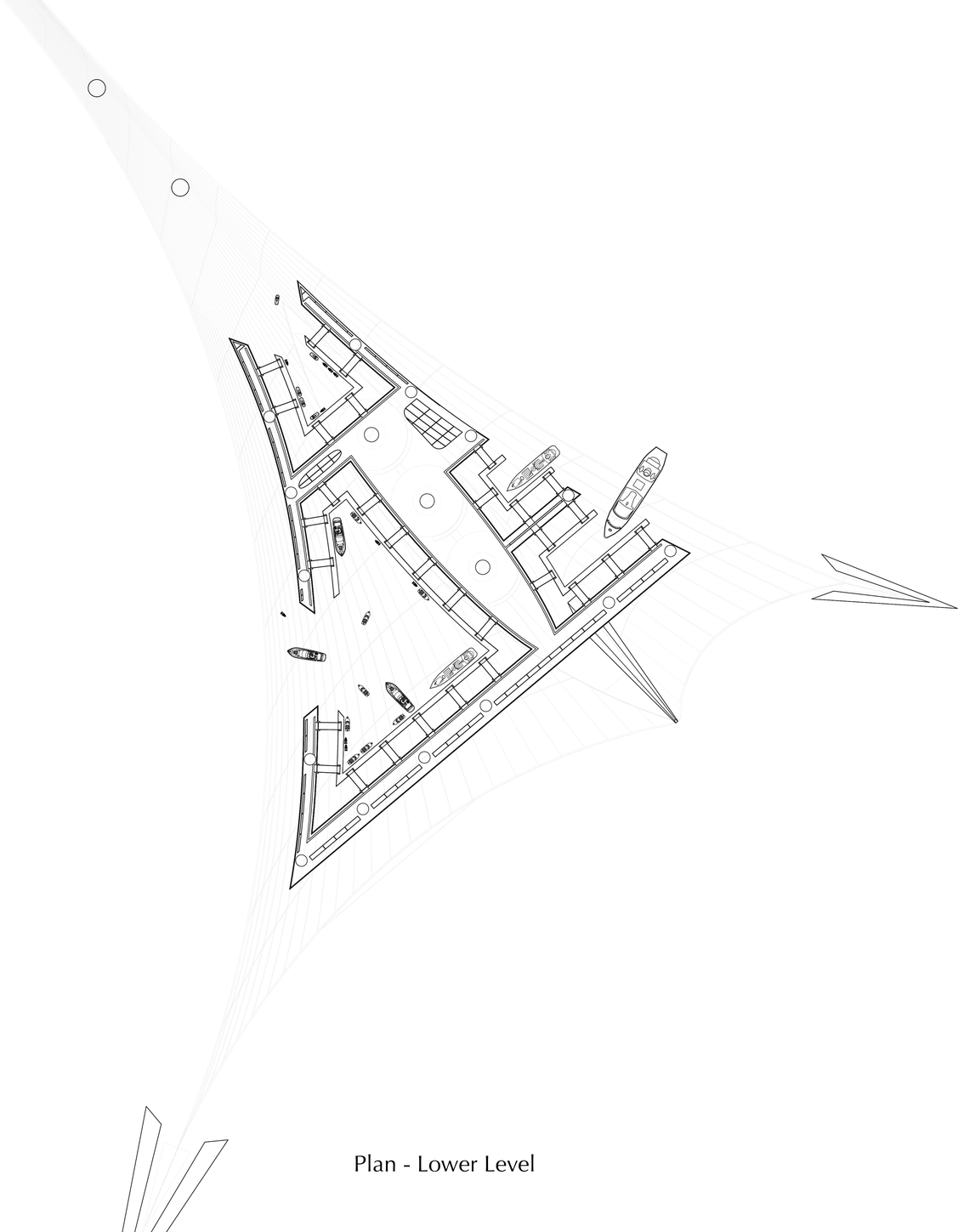

Plan - Lower Level

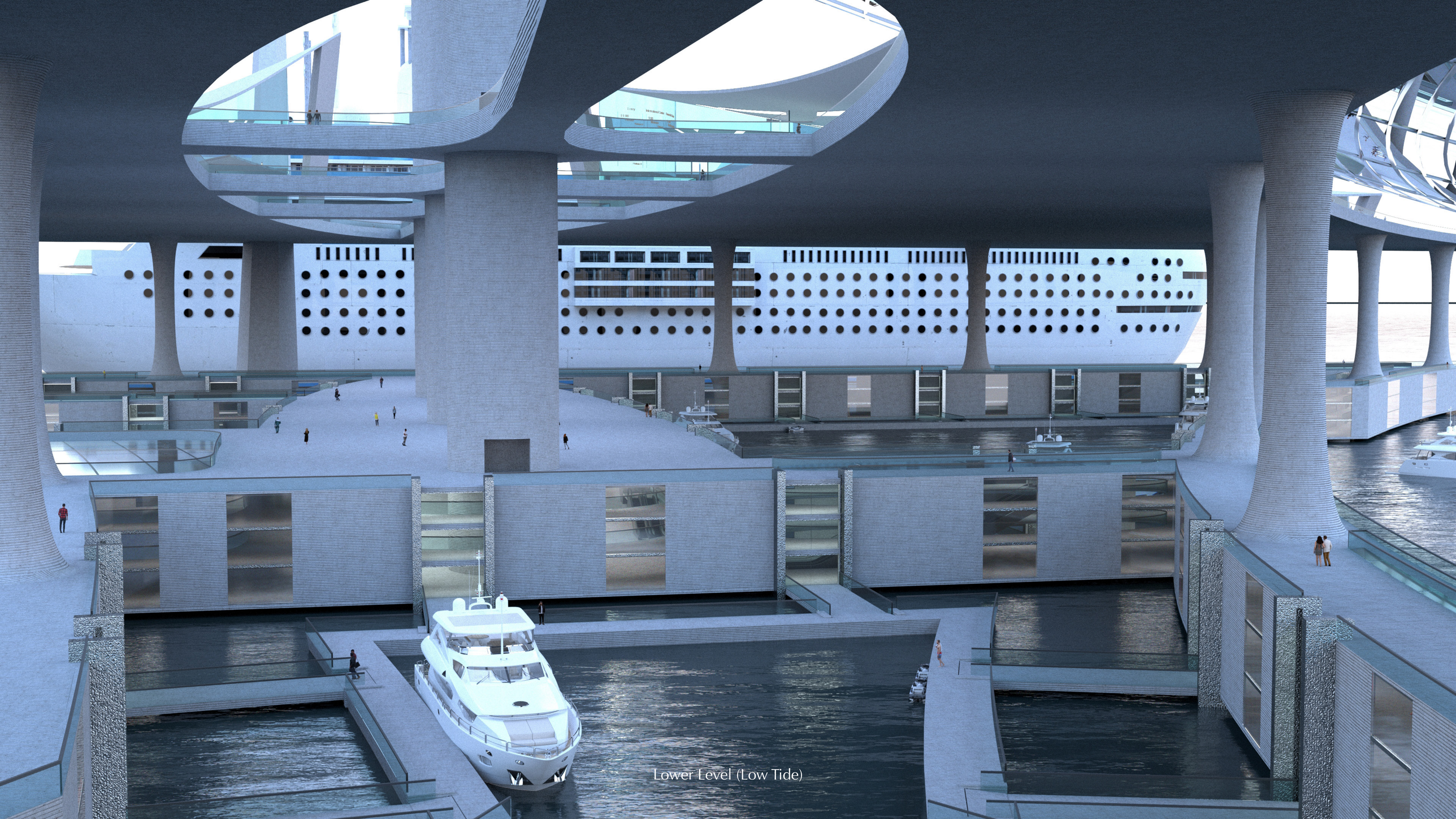

Lower Level (Low Tide)

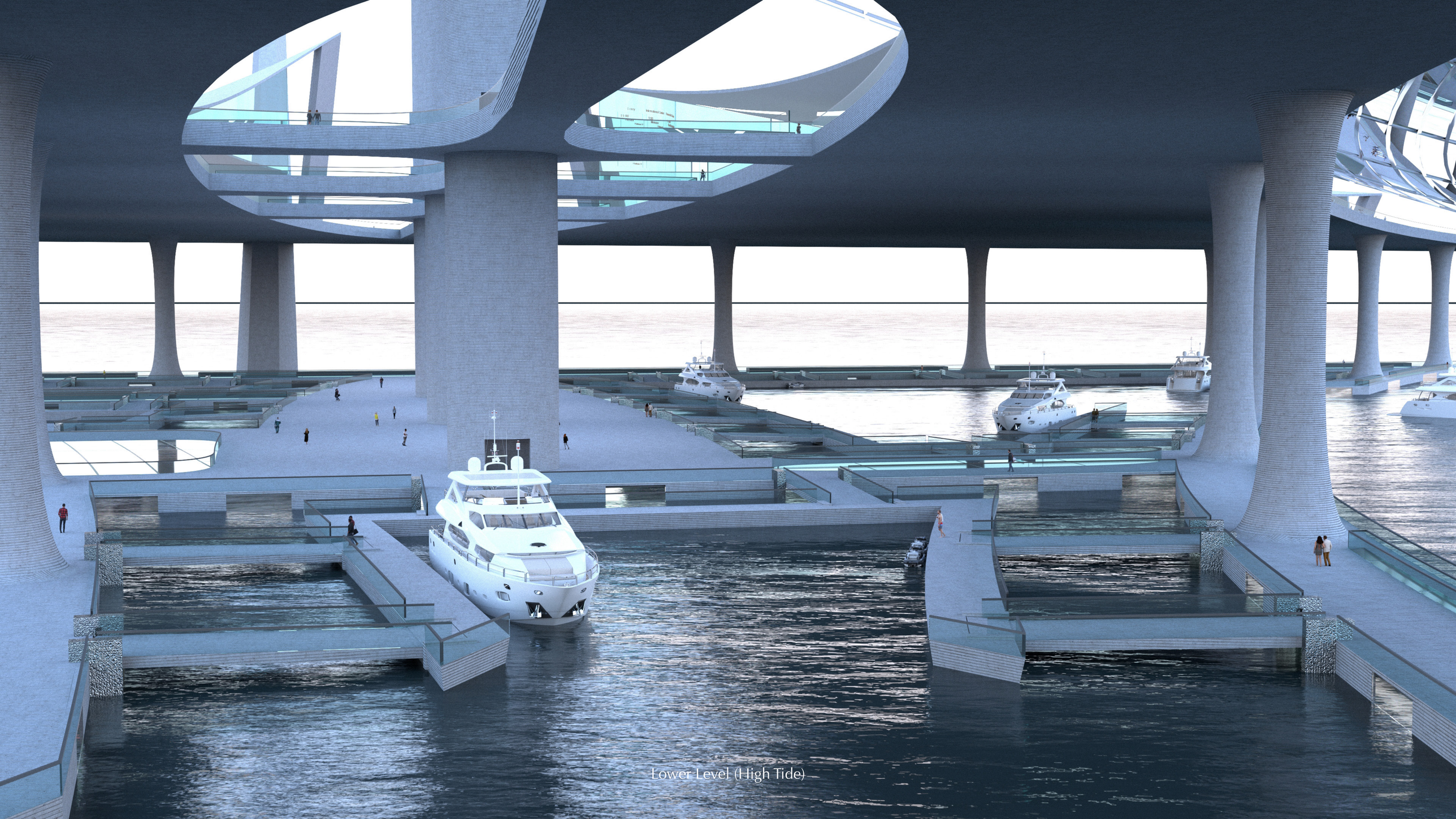

Lower Level (High Tide)

The greatest challenge Lundy brought to the lower level, which acts as a pier, was the huge 8.5-meter tide difference. A four-storey rigid main structure was designed for the lower level. A floating dock is set within each docking bay. A detachable ramp system was designed to connect the floating dock and the respective level of the main structure according to the tide situation. The ramp is fixed to a rail on each side through the circular beam that is fixed with the bearing located within the rail to allow unrestricted horizontal rotation. Each bearing is attached through steel ropes to two engines, respectively found on both ends of the rail. Four sets of clampers are set within each rail, each horizontally parallel to the four levels of the main structure of the lower level. A sensor for each set is distributed 0.22 meters below the centre of the respective set of clampers, named sensor A to D from top to bottom.

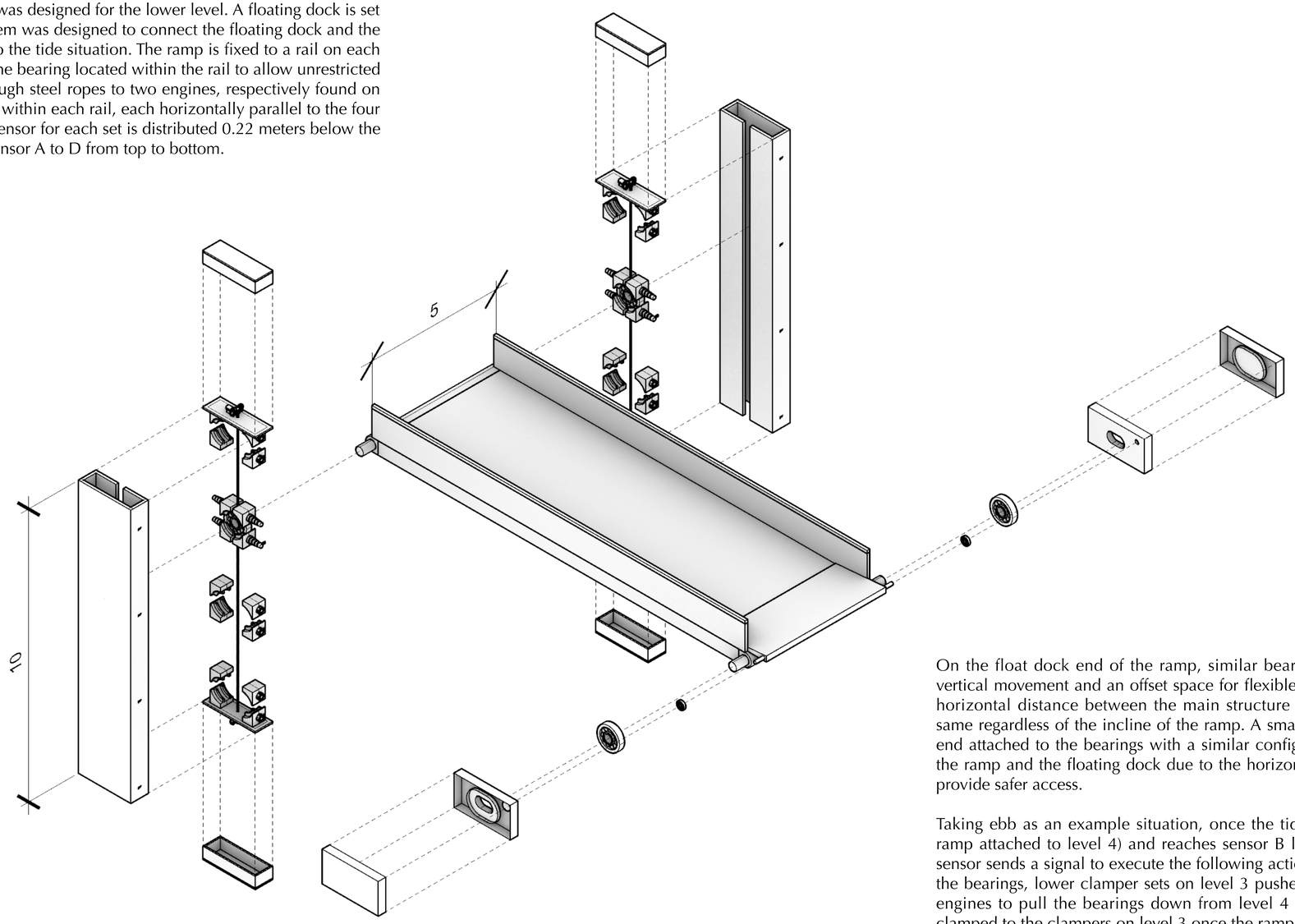

On the float dock end of the ramp, similar bearings are applied but with a fixed vertical movement and an offset space for flexible horizontal movement to keep the horizontal distance between the main structure and the floating dock always the same regardless of the incline of the ramp. A small sub ramp is applied at the same end attached to the bearings with a similar configuration to cover the gap between the ramp and the floating dock due to the horizontal movement of the ramp and to provide safer access.

Taking ebb as an example situation, once the tide descends from max tide (when ramp attached to level 4) and reaches sensor B located slightly below level 3, the sensor sends a signal to execute the following actions: clampers on level 4 to release the bearings, lower clamper sets on level 3 pushed out to the capture position, and engines to pull the bearings down from level 4 to level 3. The ramp is then fully clamped to the clampers on level 3 once the ramp drops to the height of level 3. Vice versa for the rising tide situation.

Detachable Ramp System Configuration

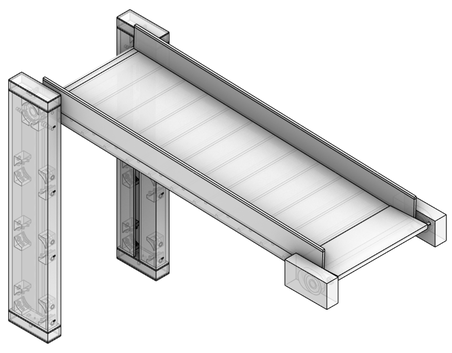

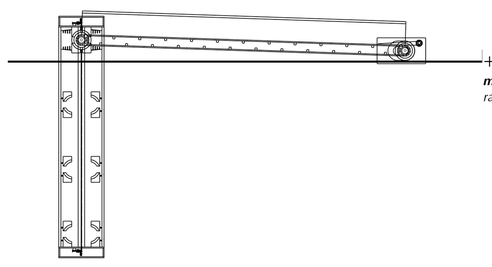

+8.5m tide
maximum *tide*
ramp attached at level 4

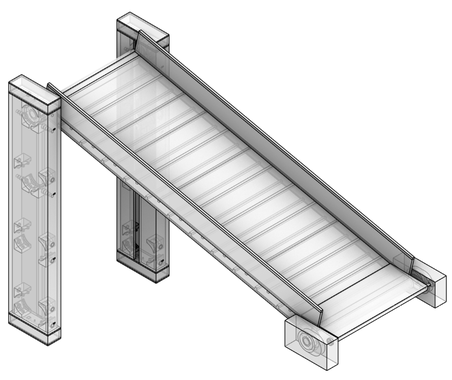

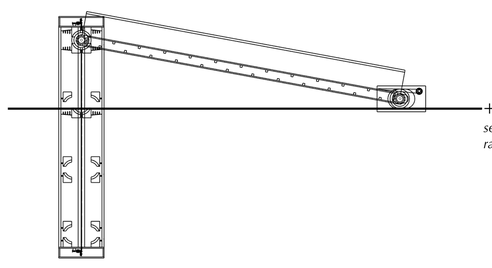

+6.28m tide
sensor B reached
ramp dropping to level 3

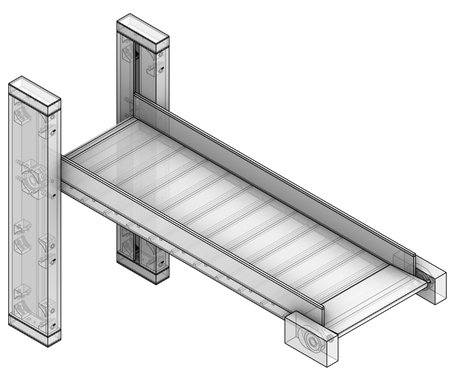

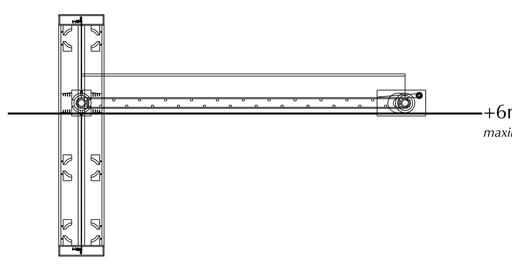

+6m tide
maximum tolerable tide at level 3

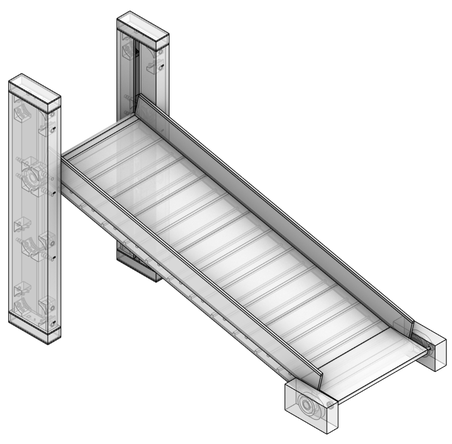

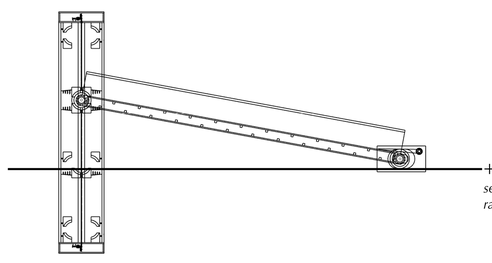

+3.28m tide
sensor C reached
ramp dropping to level 2

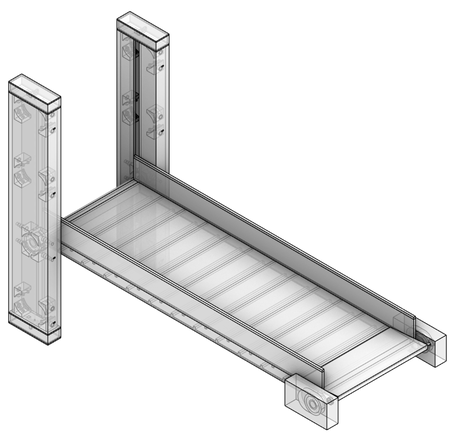

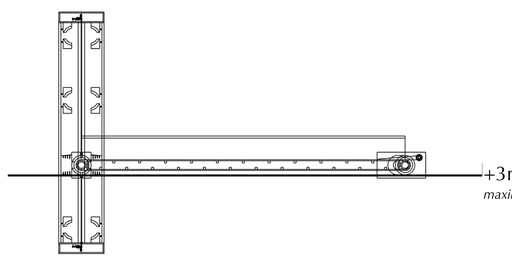

+3m tide
maximum tolerable tide at level 2

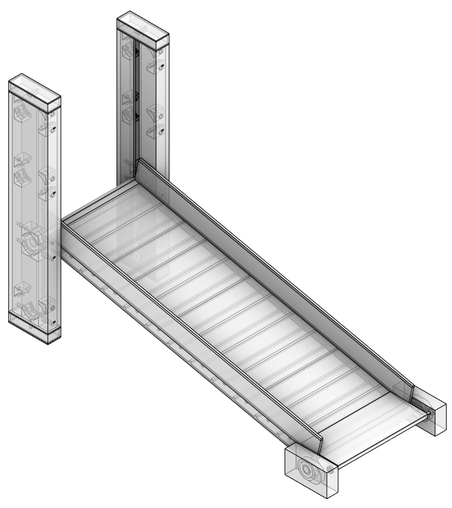

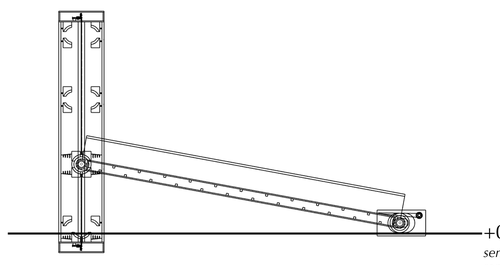

+0.28m tide
sensor D reached
ramp dropping to level 1

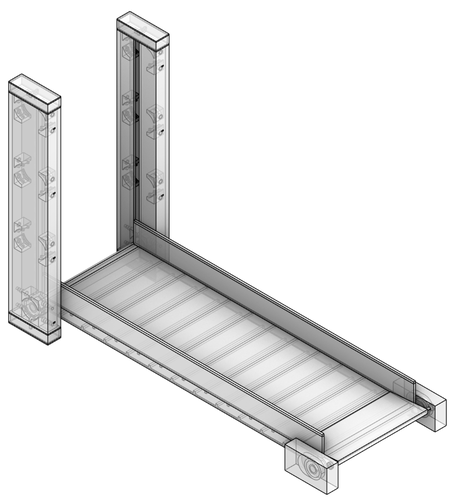

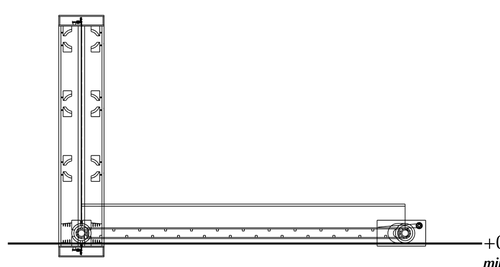

+0m tide
minimum *tide*
ramp attached at level 1

Ebb Operation Demonstration

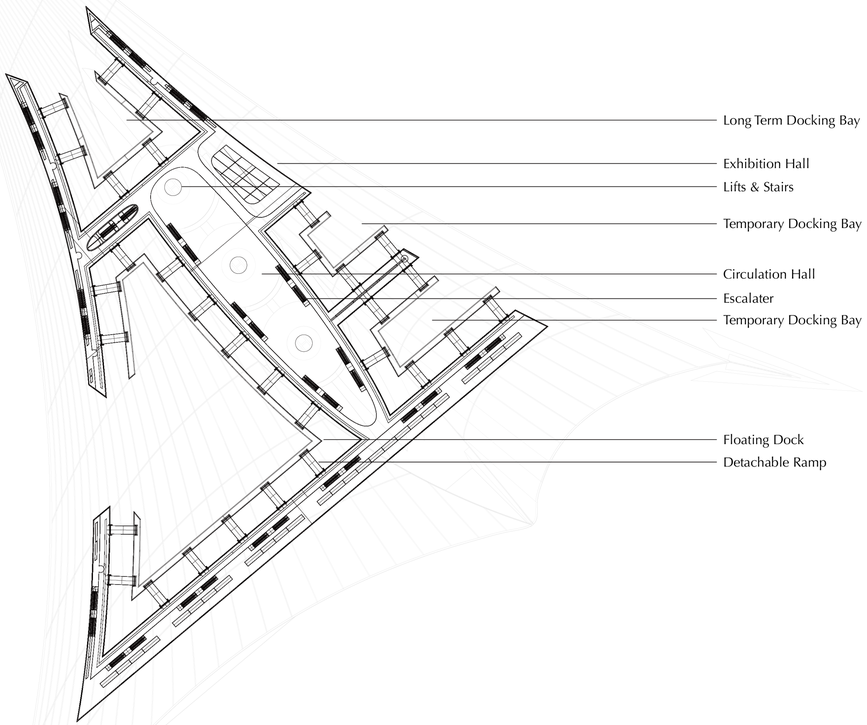

Plan - Lower Level Function

Lower Level - Circulation Hall

Lower Level - Exhibition Hall

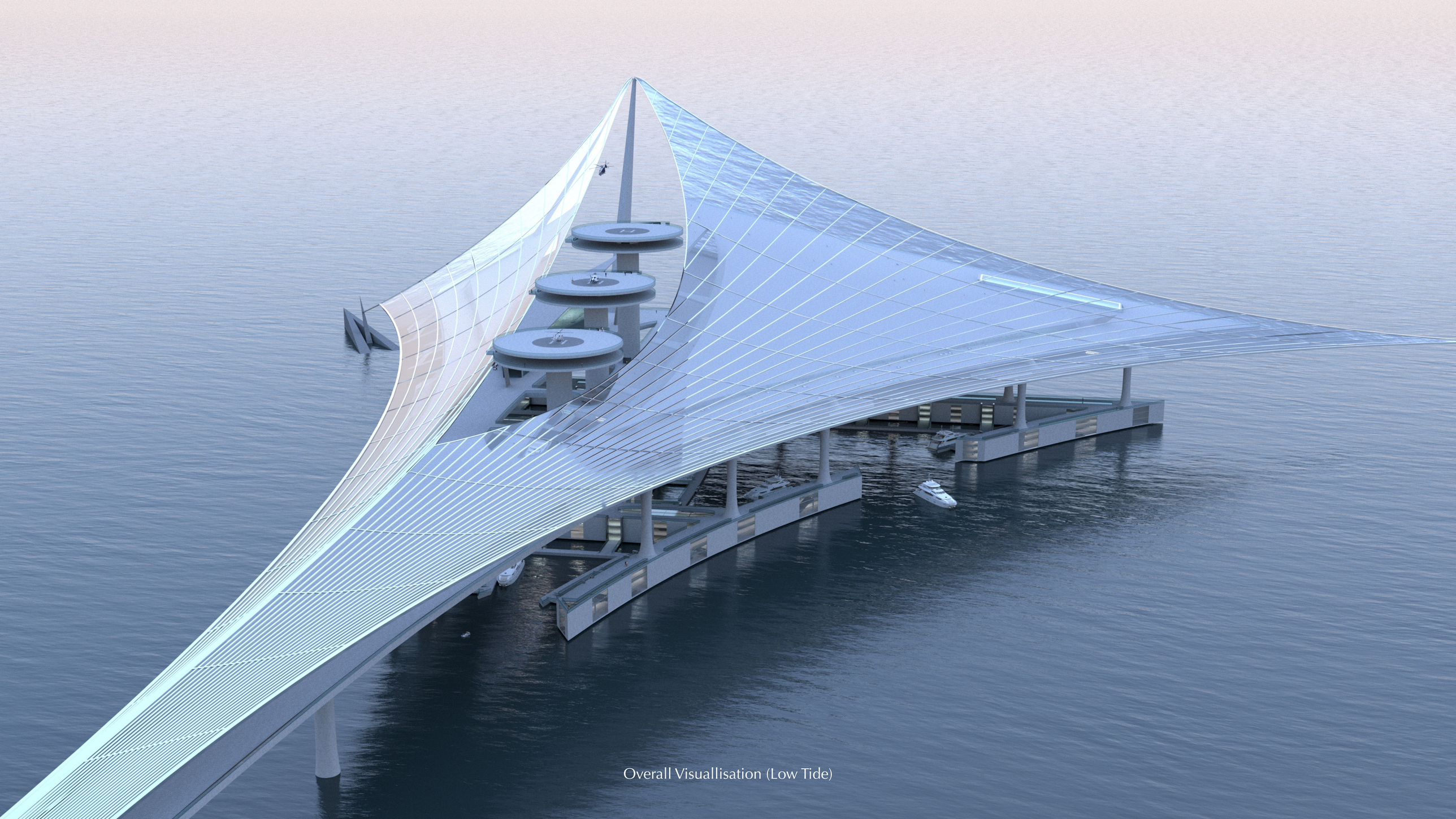

Overall Visuallisation (Low Tide)

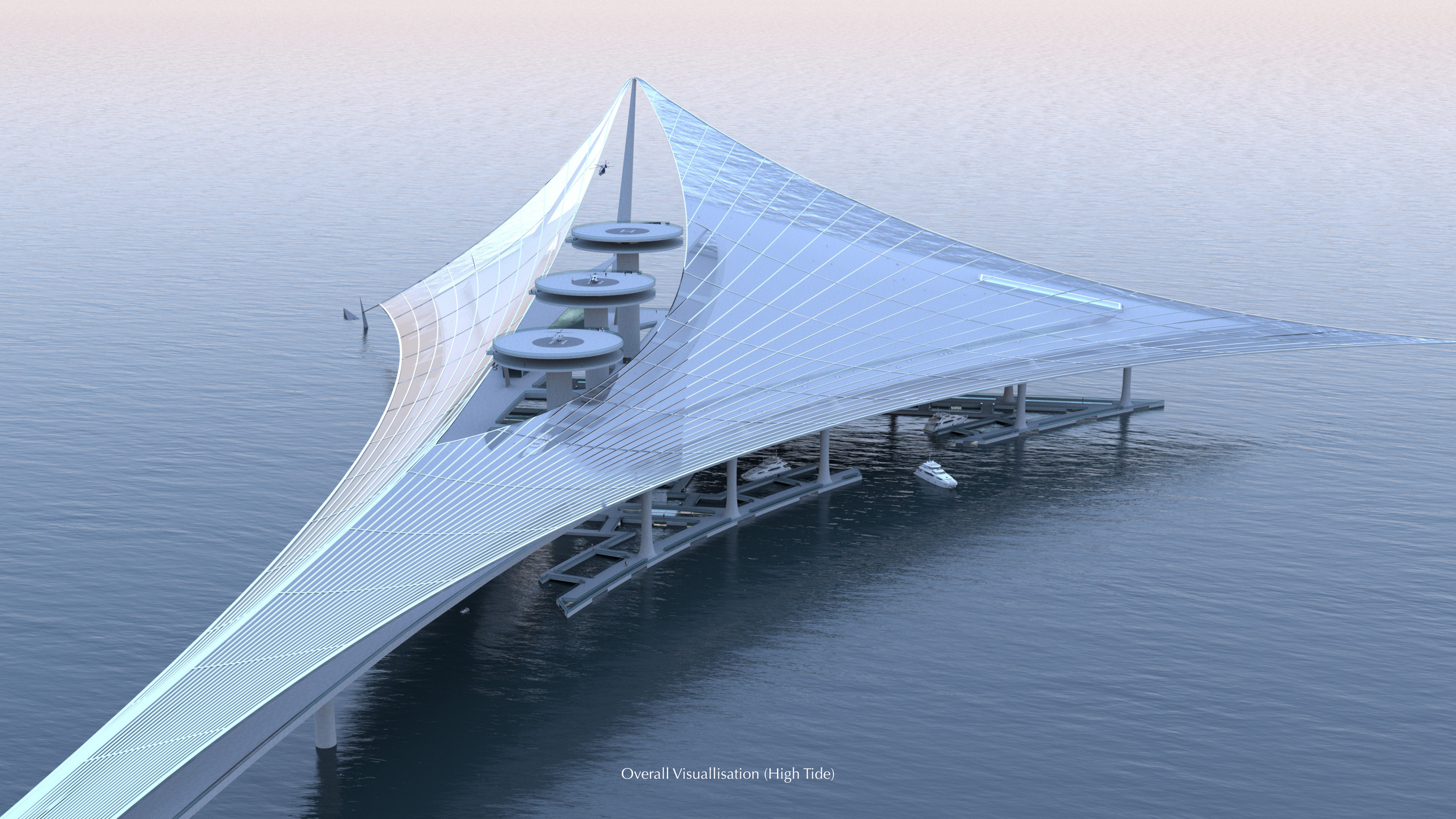

Overall Visuallisation (High Tide)

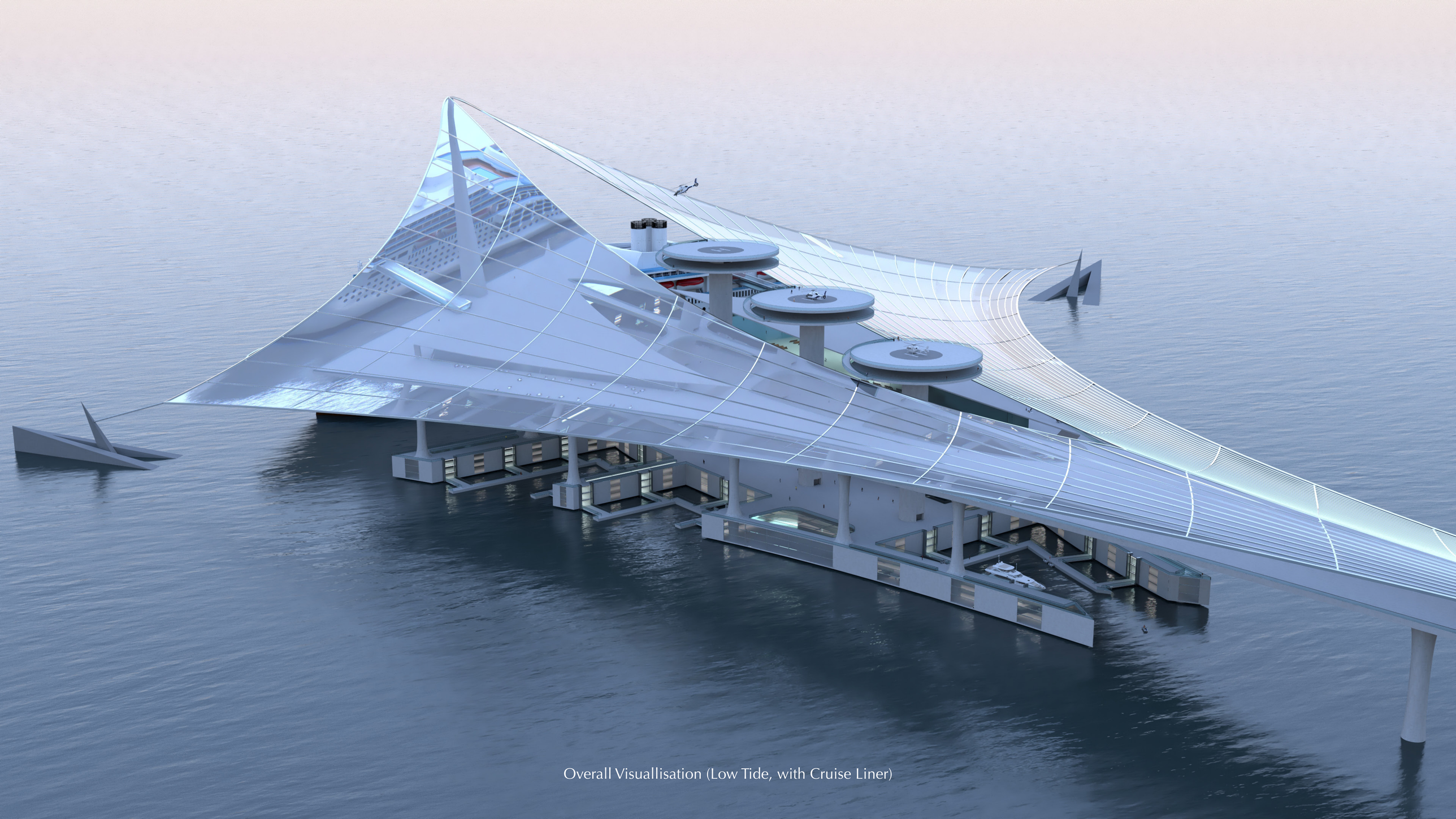

Overall Visuallisation (Low Tide, with Cruise Liner)